VARTA ProMotive HD

Vehicle Key Benefits

- Engineered in Germany
- Патентована PowerFrame® решетка за надеждна стартова мощност, бързо зареждане и устойчивост на корозия
- Отговаря на всички критерии за оригинална част на производителя на тежки превозни средства

For more information visit varta-automotive.com

ORDER INFORMATION	
European Type No. (ETN):	600123072
Article Number:	600123072A742
Short Code:	H9
Barcode:	4016987129029
UK Code:	
Packaging Unit:	1
Quantity per Pallet:	36

TECHNICAL INFORMATION			
Voltage [V]:	12	**Base Hold-down:**	B03
Battery Capacity [Ah]:	100	**Layout:**	0
CCA, EN [A]:	720	**Terminal Types:**	1
Length [mm]:	313	**Case Size:**	GB28
Width [mm]:	175	**Weight filled (kg):**	24,900
Height [mm]:	205		

© Clarios 2024

DRAWINGS

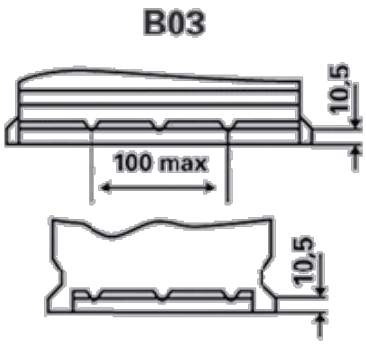

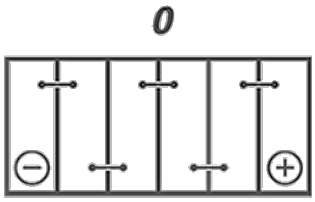

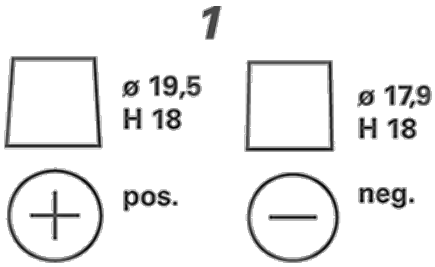

© Clarios 2024