VARTA ProMotive HD

Vehicle Key Benefits

- Engineered in Germany
- Патентована PowerFrame® решетка за надеждна стартова мощност, бързо зареждане и устойчивост на корозия
- Отговаря на всички критерии за оригинална част на производителя на тежки превозни средства

For more information visit varta-automotive.com

ORDER INFORMATION	
European Type No. (ETN):	643033095
Article Number:	643033095A742
Short Code:	K4
Barcode:	4016987129197
UK Code:	
Packaging Unit:	1
Quantity per Pallet:	21

TECHNICAL INFORMATION			
Voltage [V]:	12	**Base Hold-down:**	B03
Battery Capacity [Ah]:	143	**Layout:**	3
CCA, EN [A]:	950	**Terminal Types:**	1
Length [mm]:	514	**Case Size:**	MAC140
Width [mm]:	218	**Weight filled (kg):**	39,850
Height [mm]:	210		

© Clarios 2024

DRAWINGS

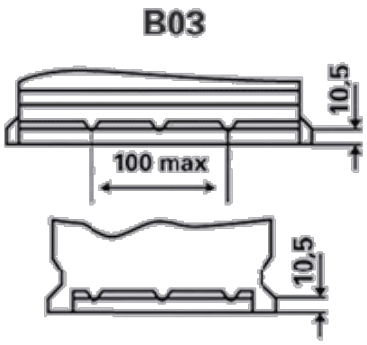

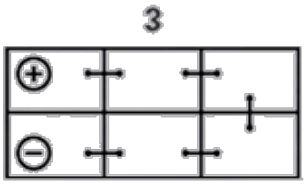

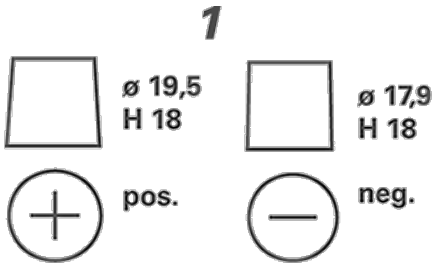

© Clarios 2024