VARTA ProMotive HD

Vehicle Key Benefits

- Engineered in Germany
- Патентована PowerFrame® решетка за надеждна стартова мощност, бързо зареждане и устойчивост на корозия
- Отговаря на всички критерии за оригинална част на производителя на тежки превозни средства

For more information visit varta-automotive.com

ORDER INFORMATION	
European Type No. (ETN):	680033110
Article Number:	680033110A742
Short Code:	M7
Barcode:	4016987129227
UK Code:	
Packaging Unit:	1
Quantity per Pallet:	21

TECHNICAL INFORMATION			
Voltage [V]:	12	**Base Hold-down:**	B03
Battery Capacity [Ah]:	180	**Layout:**	4
CCA, EN [A]:	1100	**Terminal Types:**	1
Length [mm]:	513	**Case Size:**	B
Width [mm]:	223	**Weight filled (kg):**	44,990
Height [mm]:	223		

© Clarios 2024
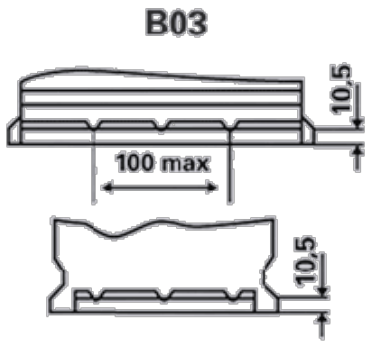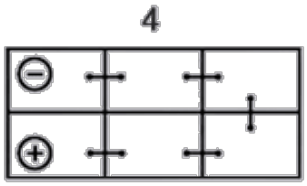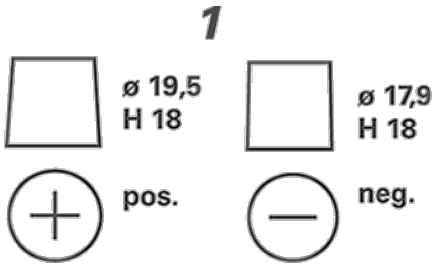
DRAWINGS