VARTA BLUE dynamic

Vehicle Key Benefits

- Engineered to the highest German standards
- Patented PowerFrame® grid for reliable starting power, fast recharge and corrosion resistance.
- Meets all original criteria of the car manufacturer

For more information visit varta-automotive.com

ORDER INFORMATION	
European Type No. (ETN):	540125033
Article Number:	5401250333132
Short Code:	A13
Barcode:	4016987142752
UK Code:	054H
Packaging Unit:	1

TECHNICAL INFORMATION			
Voltage [V]:	12	**Base Hold-down:**	B01
Battery Capacity [Ah]:	40	**Layout:**	0
CCA, EN [A]:	330	**Terminal Types:**	3
Length [mm]:	187	**Case Size:**	B19
Width [mm]:	140	**Weight filled (kg):**	10,1
Height [mm]:	227		

© Clarios 2024
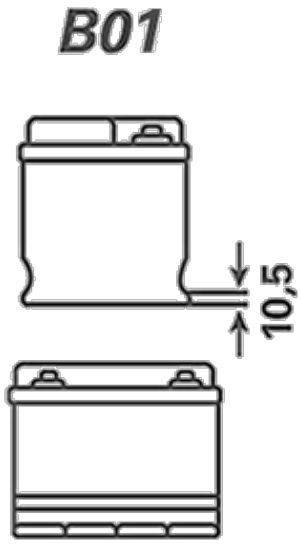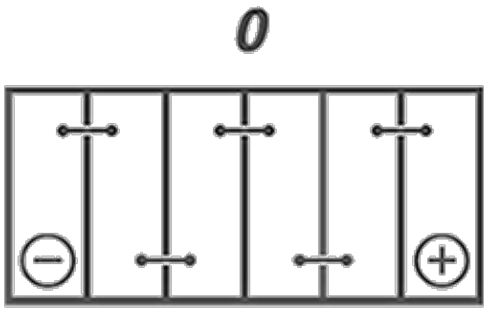
DRAWINGS