VARTA BLACK dynamic

Vehicle Key Benefits

- Engineered to the highest German standards
- Patented PowerFrame® grid for reliable starting power, fast recharge and corrosion resistance.
- Fulfills requirements of the OE as a matching spare part

For more information visit varta-automotive.com

ORDER INFORMATION	
European Type No. (ETN):	545413040
Article Number:	5454130403122
Short Code:	B20
Barcode:	4016987119372
UK Code:	077
Packaging Unit:	1
Quantity per Pallet:	72

TECHNICAL INFORMATION			
Voltage [V]:	12	**Base Hold-down:**	B13
Battery Capacity [Ah]:	45	**Layout:**	1
CCA, EN [A]:	400	**Terminal Types:**	1
Length [mm]:	207	**Case Size:**	H4R/LN1R
Width [mm]:	175	**Weight filled (kg):**	11,43
Height [mm]:	190		

© Clarios 2024
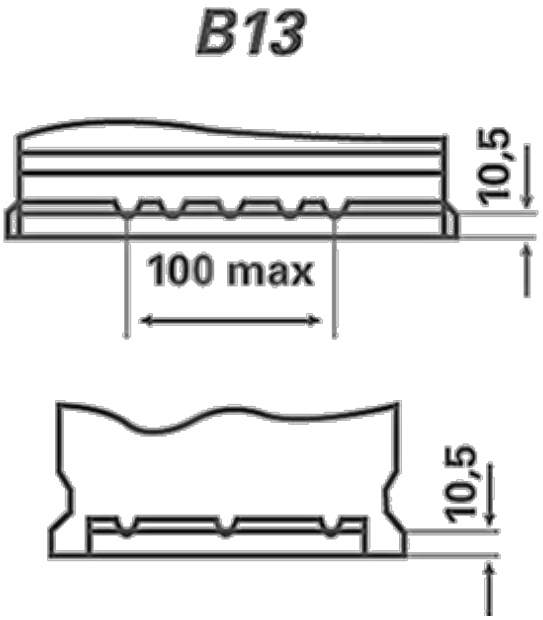
DRAWINGS