VARTA ProMotive SHD

Vehicle Key Benefits

- Engineered in Germany
- Patented PowerFrame® grid for reliable starting power, fast recharge and corrosion resistance.
- Meets all original criteria of the commercial vehicle manufacturer

For more information visit varta-automotive.com

ORDER INFORMATION	
European Type No. (ETN):	670104100
Article Number:	670104100A722
Short Code:	M9
Barcode:	4016987128879
UK Code:	620HD
Packaging Unit:	1
Quantity per Pallet:	21

TECHNICAL INFORMATION			
Voltage [V]:	12	**Base Hold-down:**	B03
Battery Capacity [Ah]:	170	**Layout:**	3
CCA, EN [A]:	1000	**Terminal Types:**	1
Length [mm]:	513	**Case Size:**	B
Width [mm]:	223	**Weight filled (kg):**	44,200
Height [mm]:	223		

© Clarios 2024

DRAWINGS

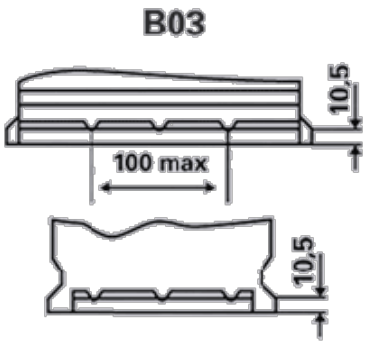

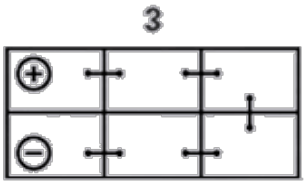

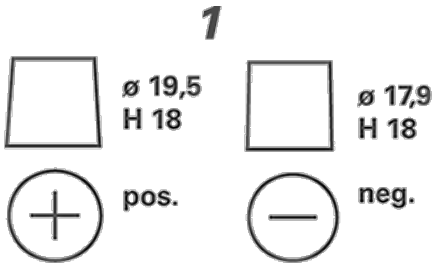

© Clarios 2024