VARTA SILVER dynamic

Vehicle Key Benefits

- Projektovan po najvišim nemačkim standardima
- Patentirana PowerFrame® mrežica za pouzdanu startnu snagu, brzo punjenje i otpornost na koroziju

For more information visit varta-automotive.com

ORDER INFORMATION	
European Type No. (ETN):	563401061
Article Number:	5634010613162
Short Code:	D39
Barcode:	4016987119761
UK Code:	077
Packaging Unit:	1
Quantity per Pallet:	63

TECHNICAL INFORMATION			
Voltage [V]:	12	**Base Hold-down:**	B13
Battery Capacity [Ah]:	63	**Layout:**	1
CCA, EN [A]:	610	**Terminal Types:**	1
Length [mm]:	242	**Case Size:**	H5R/LN2R
Width [mm]:	175	**Weight filled (kg):**	14,78
Height [mm]:	190		

© Clarios 2024

DRAWINGS

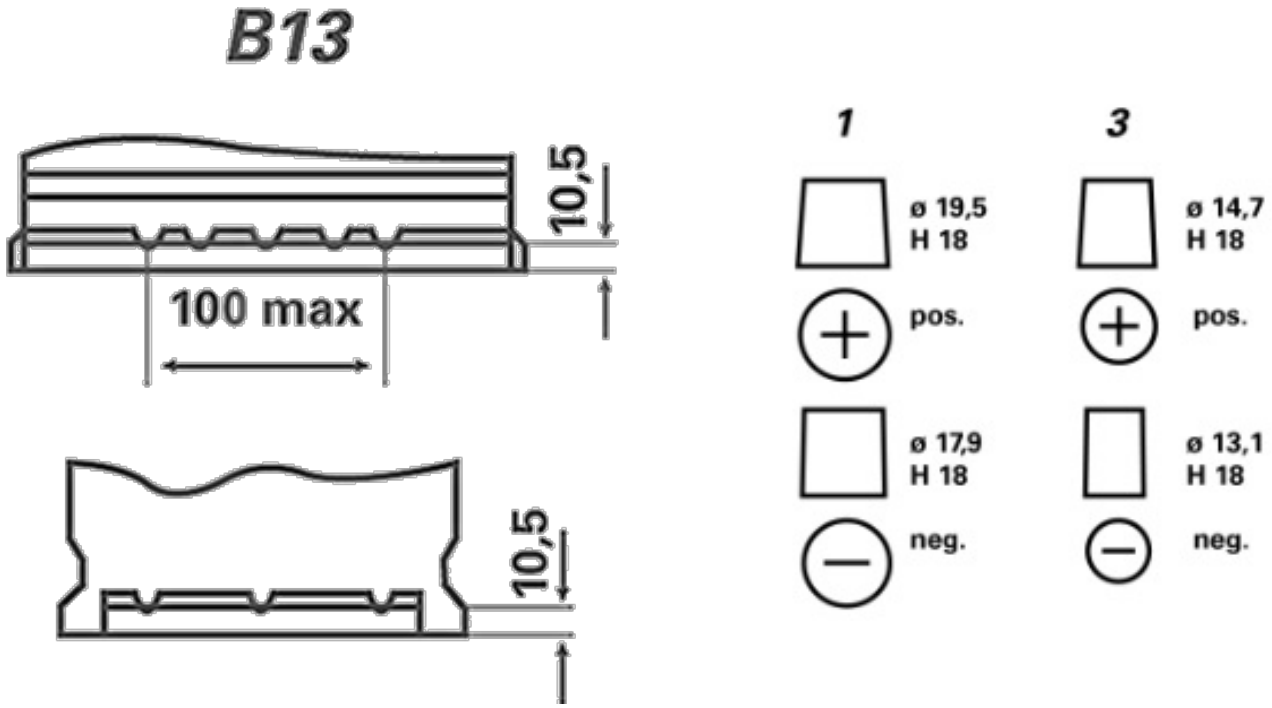

© Clarios 2024