VARTA ProMotive HD

Vehicle Key Benefits

- Engineered in Germany
- Patentirana PowerFrame® mrežica za pouzdanu startnu snagu, brzo punjenje i otpornost na koroziju
- Ispunjava sve zahtjeve proizvođača komercijalnih vozila

For more information visit varta-automotive.com

ORDER INFORMATION	
European Type No. (ETN):	620109076
Article Number:	620109076A742
Short Code:	I16
Barcode:	4016987129111
UK Code:	
Packaging Unit:	1
Quantity per Pallet:	24

TECHNICAL INFORMATION			
Voltage [V]:	12	**Base Hold-down:**	B03
Battery Capacity [Ah]:	120	**Layout:**	4
CCA, EN [A]:	760	**Terminal Types:**	1
Length [mm]:	510	**Case Size:**	MAC120
Width [mm]:	175	**Weight filled (kg):**	35,120
Height [mm]:	235		

© Clarios 2024
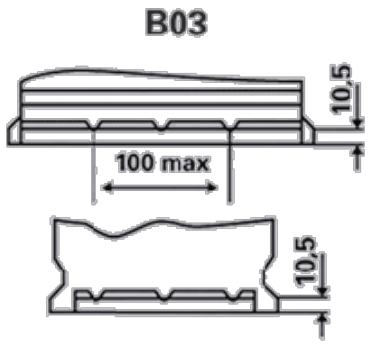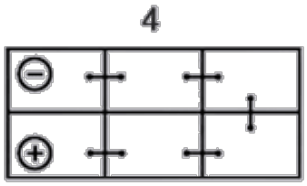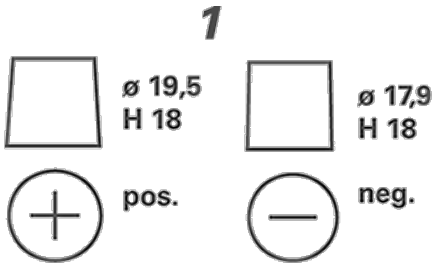
DRAWINGS